CONTENT BASED QOS DIFFERENTIATION FOR VIDEO STREAMING IN A WIRELESS ENVIRONMENT

Nicolas Tizon and Béatrice Pesquet-Popescu

Signal and Image Processing Dept., GET - Télécom Paris
46 rue Barrault, 75634 Paris, France
Email: {tizon, pesquet}@tsi.enst.fr

ABSTRACT

This paper adresses the problem of resource allocation for video streaming applications in a cellular wireless network. We propose a solution based on Regions Of Interest (ROI) partitioning to hierarchically transmit packets in order to keep an acceptable experienced QoS in the case of degraded conditions. The proposed resource allocation strategy in terms of scheduling policy is between best-effort and guaranteed bitrate transmissions. Thanks to an efficient coding method, video content differentiation based on psycho-visual perception is translated from IP domain to Radio Resources Management entities. Adopting a motion based model to differentiate ROIs inside video frames, we show that our approach provide substantial quality gain compared to classical packet transmission methods.

1. INTRODUCTION

In today wireless world video communication is one of the major technical challenges. In order to provide a high degree of interoperability between service providers, the 3GPP organisation develops standardized solutions for 3G networks. Concerning video applications, 3GPP defines a wide range of services in which different transport protocols can be combined with recent source coding solutions. Thanks to the superiority of its coding efficiency and the integration of network oriented features like error resilience, H.264/AVC [1][2] video coding has been largely adopted for point-to-point packet-switched services and multicast/broadcast services [3].

The key component for radio resources management operations is the packet scheduling which shares out the overall bandwidth of a cell assigning different priorities to users. With recent advances in video coding such as Scalable Video Coding (SVC) project of ITU/JVT and MPEG [4], a generalization of content-aware scheduling schemes will be possible. This codec is an enhancement of H.264/AVC coding algorithm but solutions have already been proposed to exploit basic scalability features of H.264/AVC. For example, Arbitrary Slice Ordering (ASO) can be used to perform hierarchical transmission of video frames following motion level of video content [5][6]. More over, FMO (Flexible Macroblock Ordering) and data partitioning can be used to provide semantic and syntactical hierarchy of data inside one video frame in respectively [7] and [8]. Concerning packet scheduling related works, [9] and [10] propose rate-distortion optimized streaming solutions with a quite theoretical approach in [9] and in [10] distortion contribution is computed considering the whole frame.

In this paper, we will focus on ROI partitioning of a frame thanks to FMO, adopting a motion based model. Partitioning information is transmitted thanks to an efficient coding method which requires only a slight modification of H.264 semantic redefining the meaning of existing syntax elements. In [7], data processing differentiation is obtained using Unequal Error Protection (UEP) schemes based on Reed-Solomon codes. In our approach, differentiation will occur at packet scheduling level according to QoS formalism defined in 3GPP [11] and we consider a cellular network where transmission conditions can fluctuate abruptly.

The paper is organized as follows: in the next section, we develop the context of our study and we propose a resource allocation strategy when QoS is not guaranteed. In section 3 we address the problem of ROI definition and propose an efficient way to transmit FMO information. To show the interest of such a strategy some experiments are presented in section 4 and we conclude in section 5.

2. BANDWIDTH ALLOCATION PROBLEM

During a video streaming session, the visual impact of packet error/loss must be limited in order to provide an acceptable end-to-end quality of service. Because a video codec use variable length coding, channel errors can lead to an irreversible loss of synchronization and a decoding failure. Normally, if macroblock and RTP payload boundaries are aligned (see packetization rules in [12]) and if header information and IDR (Instantaneous Decoding Refresh) pictures are sent out of band through a secured channel, the decoder must be able to face RTP packet loss without crashing. Considering that the transport protocol is robust enough to maintain the synchronization at the decoder side, the key issue to improve the transmission is to avoid that RTP packet loss cause a huge increase of distortion between original and decoded video content.

2.1 Blind retransmissions at Radio Link Control (RLC) layer

At RLC layer, retransmission mechanisms allow to decrease block error rate available at application layers. In the case of strict real time applications, if the delay introduced by retransmissions is too important, the retransmitted packets will be ignored by the application and the effect would be equivalent to a packet loss. In video streaming, the client buffer is dimensioned to accept an average delay of about 1s for the packet transmission. In most cases, this value is compatible with experienced transmission delay in a 3G network implementing RLC Automatic Repeat Request (ARQ). However, in highly error-prone conditions RLC retransmissions would significantly increase radio resources consumption.

Usually, RLC packets are processed identically without differentiation and each lost packet is retransmitted independently of its content provided that the maximum delay or number of retries is not reached. Thus, in such circumstances, extra radio resources are used for retransmission even if the packet does not convey critical information. Likewise, when a guaranteed bitrate is negotiated, radio resources are reserved to transmit all RTP packets without differentiation preventing the optimization of resource allocation among all users. On the other hand, when no bitrate is guaranteed, if allocated bandwidth decreases (congestion, radio resources management, radio conditions spoiling), RTP packets will be blindly discarded without considering their relative importance for end-to-end QoS.

2.2 ROI coding with Flexible Macroblock Ordering (FMO)

H.264/AVC provides a syntactical tool: FMO, which allows partitioning video frames into slice groups. Seven different modes, corresponding to seven different ordering methods, exist to group macroblocks inside slice groups. For each frame of a video sequence, it is possible to transmit a set of informations: Picture Parameter Set (PPS), in which the parameter *slice_group_map_type* specifies

FMO mode of the corresponding frame. According to this parameter, it is also possible to transmit additional information to define the mapping between macroblocks and slice groups. Each slice group corresponds to a Network Abstraction Layer (NAL) unit that will be further used as RTP payload. This mapping will assign each macroblock to a slice group which gives a partitioning (up to eight partitions) of the image. There exist six mapping methods for an H.264 bitstream. In this study we use mode 6, called *explicit MB to slice group mapping*, where each macroblock is associated to a slice group index in the range $[0..7]$. The relation of macroblock to slice group map amounts to finding a relevant partitioning of an image. Evaluation of partitioning relevance strongly depends on the application and often leads to subjective metrics. In section 3 we discuss how to perform this partitioning based on video content and we propose an efficient method to encode and transmit MB to slice group mapping information.

After ROI partitioning, the bitstream representation has a semantic hierarchy and each slice group is carried by distinct RTP streams. A RTP stream can be recognized thanks to UDP port number at transport layer or to a specific Type Of Service (ToS) value as DiffServ field at IP layer for example. Considering that the RTP packetization modality is Single Network Abstraction Layer (NAL) unit mode (one NAL unit/RTP payload), the division of original stream into many RTP substreams leads to an increase of the number of RTP headers. To limit the multiplications of header information, interleaved RTP packetization mode allows multi-time aggregation packets (NAL units with different time stamps) in the same RTP payload. In our case, we make the assumption that RoHC mechanisms provides RTP/UDP/IP header compression from 40 to 4 bytes in average which is negligible compared to RTP packet sizes and we still packetize one NAL unit per RTP payload.

2.3 Resource allocation

In 3G networks, QoS is defined during session establishment when a Radio Access Bearer (RAB) is allocated. Each RAB is defined with a specific set of QoS attributes known by each routing entity of the network and more particularly by the packet scheduler. Then, the hierarchical data processing is provided by the activation of a RAB with specific QoS ($\approx$ a channel with a specific configuration) for each slice group and the 3G network entry point, namely the Gateway GPRS Support Node (GGSN), is in charge of the mapping between RTP streams and QoS differentiated RABs.

2.3.1 Single channel configuration per streaming session

Usually the bitstream is encoded using constant bitrate (CBR) control algorithm with relaxed constraints leading to a non-strictly CBR bitsream as depicted in Fig. 1. Let us denote $BRs(t)$ the compressed source bitrate as a function of time, *ABRs* (Average source Bitrate) the target bitrate of the control algorithm and T the timing window for bitrate computation. The relation between these variables is given by:

$$ABRs = \frac{1}{T}\int BRs(t)\,dt \tag{1}$$

For the class of streaming applications, the transport channel is negotiated with a **guaranteed bitrate** (*GBR*) close to the average bitrate of the compressed video source [13], with the assumption that client and transmission buffers allow absorbing bitrate variations around *ABRs*. Moreover, an additional bandwidth can be punctually required to face erroneous/lost packet retransmissions. Let us denote $BRe(t)$ the effective bitrate at RLC layer (including retransmissions) to guarantee *GBR* bitrate at application level. Then, defining *BLER* as the block error rate at RLC layer, we can write the average $BRe(t)$:

$$ABRe = \frac{1}{T}\int (BRe(t))dt = \frac{GBR}{1-BLER} \tag{2}$$

In order to adapt *ABRe* bandwidth allocated to each user in the cell, resource management entities periodically evaluate experienced channel state through *BLER* values. If the channel error rate is null, this bandwidth is equal to *GBR*. The maximum network throughput in a cell is limited and when radio conditions become very bad the negotiated *GBR* bandwidth is no longer maintained for each user. In figure 1, with the cumulative effect of encoder bitrate variations and radio errors, user bitrate at the decoder can not follow the encoded sequence bitrate.

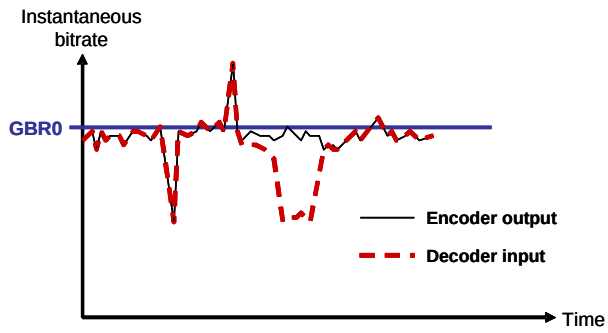

Figure 1: Instantaneous bitrate with one RAB.

Next, we assume that the bandwidth allocated to the user is not large enough with respect to negotiated *GBR*. If all video packets are transmitted through the same channel, they are blindly discarded leading to a poor experienced quality at the client side. Assuming that the index 0 refers to variables involved in a single channel (reference use case) scenario, the previous assumption can be expressed as:

$$GBR_0 \geq ABRe_0(1-BLER) \tag{3}$$

2.3.2 Differentiated bandwidth allocation

If each video frame is partitioned into N slice groups transmitted through N different channels with specific attributes, Eq. (3) becomes:

$$\sum_{k=1}^{N} GBR_k \geq \sum_{k=1}^{N} ABRe_k(1-BLER) \tag{4}$$

Following the network policy, the scheduling algorithm uses the **traffic handling priority** attribute to schedule packets from different RABs. Nevertheless when also guaranteed bitrate values are specified, this parameter is predominant and traffic handling priorities between RABs may be used to hierarchically allocate additional available resources. In the context of this study, this attribute is used to hierarchically transmit image regions (slice groups) considering their relative importance in terms of psycho-visual perception. Lower indexes correspond to higher priorities and low priority regions are lost firstly when resources become scarce.

In order to simplify, we take $N = 2$. Besides, maximum available bandwidth *ABRe* and total bitrate at source coding *ABRs* are set to identical values for whatever considered strategy (single channel or differentiated QoS approach):

$$\begin{aligned} ABRe &= ABRe_0 = ABRe_1 + ABRe_2 \\ ABRs &= ABRs_0 = ABRs_1 + ABRs_2 \end{aligned} \tag{5}$$

Thanks to the higher priority accorded to slice group 1 transmission, $ABRe_1$ can increase up to the *ABRe* value in order to satisfy the constraint:

$$GBR_1 = ABRe_1(1-BLER) \leq ABRe(1-BLER) \tag{6}$$

The equality $ABRe_1 = ABRe$ is verified when $BLER = BLER_{max}$, which corresponds to an arbitrary value. Above this upper bound, $ABRe_2 = 0$ and transport channel conditions are not considered to

be acceptable enough to start or to uphold the session. Then we can write:

$$GBR_1 = ABRe(1 - BLER_{max}) \quad (7)$$

As discussed previously, when CBR oriented algorithms are used at source coding, one can approximate $GBR = ABRs$. Thus, the ROI choice amounts at finding an image partitioning that verifies:

$$\begin{aligned} ABRs_1 &= ABRe(1 - BLER_{max}) \\ ABRs_2 &= ABRs - ABRs_1 \end{aligned} \quad (8)$$

The way to derive $BLER_{max}$ value strongly depends on the video content and involves subjective quality metrics. Some criteria could be used based on psycho-visual perception as described in the following section. In section 4, simulation results are commented to highlight the relevance of our partitioning method compared to subjective and objective quality metrics like signal distortion based on mean square error.

3. ROI SOURCE CODING

3.1 ROI definition

In image processing, detection of ROIs is often conducted as a segmentation problem if no other assumptions are formulated about the application context and post-processing operations that will be applied on the signal.

Concerning the application context of our study, we formulate the basic assumption that in the majority of cases, a video signal represents moving objects in front of almost static background. In other words, we make the assumption that the camera is fixed or that it is moving slower than the objects inside the scene. With this model, moving objects represent the ROI. According to this definition, motion estimation (ME) that occurs during the encoding process delivers relevant information through motion vector values to detect ROIs. In H.264, the finest spatial granularity to perform ME is a 4×4 block of pixels while FMO acts at macroblock level. In our simulations, to detect ROIs we compute the median value of motion vectors in a macroblock and map the macroblock to ROI if this values is higher than a threshold value. This threshold directly depends on $BLER_{max}$ parameter defined in the previous section, as it allows to set $ABRs_1$ bitrate. In addition, ROI classification must take into account dependences between data in the compressed stream and the fact that the distortion in one image can be induced by packet losses that occurred earlier. The context of our study being 3G streaming application, we use an encoding configuration with only one reference frame for ME. Therefore, ROI definition in a given frame must also take into account macroblocks which are used by motion compensation in the next frame.

3.2 Mapping information coding for efficient transmission

The H.264/AVC standard defines a macroblok coding mode applied when no additional motion and residual information need to be transmitted in the bistream. This mode, called SKIP mode, occurs when the macroblock can be decoded using information from neighbor macroblocks (in the current frame and in the previous frame). In this case, no information concerning the macroblok will be carried by the bitstream. A syntax element, *mb_skip_run*, specifies the number of consecutive skipped macroblocks before reaching a non-skipped macroblock.

In our macroblock to slice group assignment method, a skipped macroblock belongs to slice group 2 (lowest priority). In fact this assignment is not really effective because no data will be transmitted for this macroblock. The set of skipped macroblocks in a frame can be seen as a third slice group (with null size) that will be carried by a third RAB (with null bitrate). In a general manner, *mb_skip_run* syntax element can be considered as a signalling element to indicate a set of macroblocks belonging to a slice group (index incremented by one) which is transmitted through a bearer with degraded QoS, as depicted in Fig. 2. If slice groups with higher indicies are lost, the decoding process will still be maintained with lower indexed slice groups.

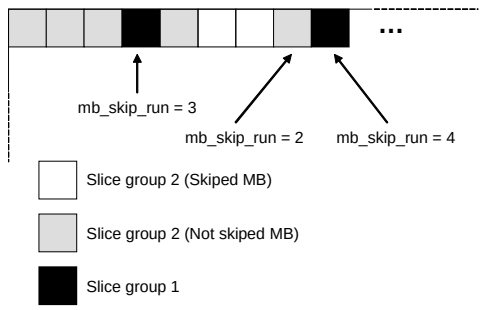

Figure 2: An example of macroblock to slice group map coded via *mb_skip_run* syntax.

This method generalizes the use of *mb_skip_run* syntax element for a joint source-channel coding and allows to code macroblock to slice group mapping without sending explicit mapping with the frame header, Picture Parameter Set (PPS), through a secured bearer. Indeed, *mb_skip_run* is included into H.264 bitstream syntax, coded with an efficient entropy coding method. This coding method does not introduce new syntax elements but as the meaning of *mb_skip_run* is modified (in the case of more than one slice group), the provided bitstream is no longer compliant with regard to H.264 reference decoder. At client side each slice group is received independently through a specific RTP stream. To be able to reconstruct the video signal, the client need to know the relative importance of each slice group. This information could be provided thanks to a correspondence between the QoS priority and the port number of UDP transport protocol fixed at the beginning of the session. In reality, if the substreams are well differentiated during packet scheduling, slice groups with higher priority will be received firstly. In addition, configuring a channel per substream implies multiplication of signalling information but the interest of the differentiated QoS approach is to maintain this signalling information only in the wired network. In the wireless domain, this information is no longer present as it was used lastly by the packet scheduler to differentiate subtreams.

4. EXPERIMENTAL RESULTS

4.1 Simulation tools

To evaluate the efficiency of the proposed approach, some experiments have been conducted using a simulator (C code) provided by the 3GPP video ad-hoc group [14].

This software is an offline simulator for an RTP streaming session over 3GPP networks (GPRS, EDGE and UMTS). Packet errors are simulated using error masks generated from link level simulations at various bearer rates and BLER values [15]. Moreover, this simulator offers the possibility to simulate time events (delay) using the time stamp field of the RTP header.

Channel conditions do not vary for the duration of the transmission, so that the provided network parameters (bitrate, loss rate) are nearly constant throughout the session. For simulating radio channel conditions two possible input interfaces are provided, bit-error patterns in binary format as well as RLC-PDU losses (ASCII format). Error masks are used to inject errors at the physical layer. If the RLC-PDU is corrupted or lost, it is discarded (i.e. not given to the receiver/video decoder) or retransmitted if RLC protocol is in acknowledged mode (AM). The available bit-error patterns determine the bitrates and SDU error ratios that can be simulated. Two bit-error patterns with binary format are used in the experiment. These patterns are characterized by a relatively high BER ($BER = 9.3e-3$ and $BER = 2.9e-3$) and are suited to be used in streaming applications, where RLC layer retransmissions can correct many of the frame losses.

All bearers are configured with persistent mode for RLC re-

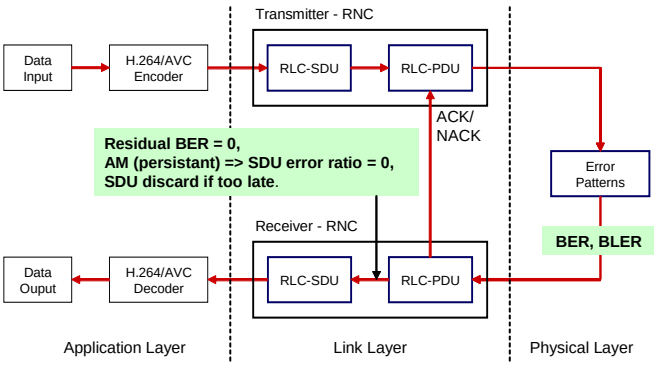

Figure 3: Simulation model.

transmissions and their bitrates are adjusted using the RLC block size and Transmission Time Interval (TTI) parameters provided by the simulator. An erroneous RLC packet is retransmitted until it is correctly received. If the maximum transfer delay due to retransmission is reached, the corresponding RTP packet is discarded. Therefore, the residual BER is always null, only missing RTP packets may occur. In order to validate a strategy, results must be provided over a large set of simulations varying the error mask statistics. Therefore, for a simulation, the error pattern is read with an offset varying from 0 at the first run and incremented by 1 for each run and finally results are evaluated over a set of 64 runs, as recommended in [16].

4.2 Simulation results

To evaluate the proposed strategy, we present simulation results obtained with the three test sequences:

- *Mother and Daughter (30 fps, QCIF, 900 frames)*: fixed background with slow moving objects.
- *Paris (30 fps, QCIF, 1065 frames)*: fixed background with fairly bustling objects.
- *Carphone (30 fps, QCIF, 382 frames)*: slow moving background with bustling objects.

Results are presented for the two resource allocation strategies described in section 2.3:

- Single channel configuration per streaming session (OneRAB).
- Content based differentiated QoS (DiffQoS).

The prediction mode scheme for frame sequencing is the classical IPPP... pattern in order to evaluate the robustness of the proposed approach and its capacity to limit distortion due to error propagation.

Integration time in Eq. (2) is set to the total time duration of the test sequence. This approximation is justified by the choice of short test sequences without scene changes and therefore the relative importance of each slice group in terms of bitrate can be considered as constant during the session. For the proposed approach (DiffQoS), $ABRe_1$ bitrate is allocated first in agreement with equation (6). Next, the residual resource $ABRe_2 = ABRe - ABRe_1$ is used to transmit the slice group 2 substream. The coding method described in 3.2 has been implemented to transmit macroblocks to slice groups mapping. The gain in terms of data compression is about 50% in respect to code the same information through PPS syntax in the case of two slice groups.

4.2.1 *Influence of packet errors*

Tab. 1 presents simulation results obtained configuring each channel with RLC packets of 80 bytes leading to a BLER of 10.8% ($BER = 9.3e-3$). Then, $BLER_{max}$ threshold used to perform slice group partitioning was empirically fixed slightly larger than this value. For each scenario the bitrate provided at RLC layer is 64 kbps and then by removing 4 bytes/packet of RLC header information, the maximum bitrate *ABRe* available at application level (above RTP layer) is approximately 60.8 kbps. Moreover, we used a bitrate constrained algorithm at source coding in order to match the target bitrate $ABRs = 60$ kbps.

	Mother&Daughter	*Paris*	*Carphone*
OneRAB	26.15 dB	24.5 dB	23.5 dB
DiffQoS	29.75 dB	26.4 dB	25.9 dB

Table 1: Performance comparison of the two approaches with $BLER = 10.8\%$.

PSNR values are measured over the whole sequence and the proposed method allows to gain from 1.9dB to 3.6dB. This gain is higher for Carphone than for Paris sequence, since this sequence with a static background is closer to the motion model described in section 3.1. This can be explained by the fact that Paris sequence is almost three times longer than Carphone and, as no intra update occurs, error propagation effects are more important. Above a certain streaming duration without intra update, error propagation effects can be seen as an increase of BLER and above a certain level of BLER the two stagtegies are equivalent. Nevertheless, in Fig. 4, we can remark that after 13s of streaming the quality perceived with the differentiated QoS strategy is clearly superior to the quality obtained with the reference method. For Mother and Daughter sequence, the gain of our method is important and this result validates the relevance of the proposed ROI partitioning approach.

Figure 4: Visual comparison for one frame (t=13s) of Paris test sequence (top: OneRAB, bottom: DiffQoS).

4.2.2 *Influence of the bandwidth limitation*

In order to evaluate the robustness of our method for bandwidth decrease, we simulated streaming sessions using the second error pattern ($BER = 2.9e-3$) and varying the total available bitrate *ABRe*. Results are presented in Fig. 5 for Paris and Carphone sequences. When total bandwidth of 64 kbps is available, our method does not provide a substantial quality gain due to the low level of BLER

($BLER = 3.3\%$). However, in the case of network congestion for example, we can see that the proposed strategy better supports bitrate amputations and can provide acceptable quality for a wider range of bitrates when *GBR* is no longer available at the application level.

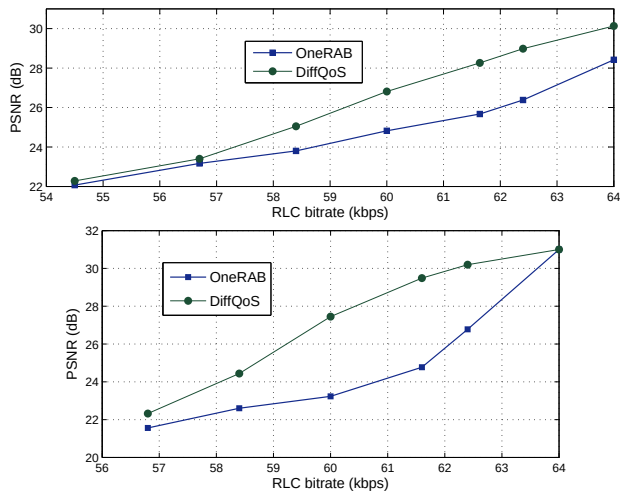

Figure 5: Quality (PSNR) evolution as a function of bandwidth limitation (top: Paris, bottom: Carphone).

4.2.3 Quality variations through the session

The capacity of our method to better face error bursts than the reference method is particularly visible in Fig. 6. At the beginning of

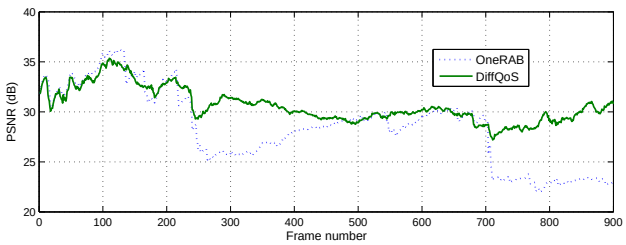

Figure 6: Frame PSNR evolution for Mother and Daughter test sequence.

the session, the two curves have the same behavior and around the 240th frame (t$\approx$ 8s), the PSNR level of the reference method deeply falls and more than 4.5s are spent to meet the continuous curve. Inversely, with the proposed strategy the PSNR decrease is smooth and the quality recovery takes less than 2s.

5. CONCLUSION AND FUTURE WORK

This study proposes a complete framework for wireless streaming: from source coding to transport channel configuration, to optimize resource utilisation thanks to a content based QoS differentiation approach. The mapping information coding proposed in section 3.2 provides a generic and efficient way to hierarchically transmit video substreams with a joint source-channel coding approach. Another interest of this work is to propose a solution based on standardized tools: H.264 and FMO at source coding and QoS differentiation at channel coding. In a 3G network, packet scheduler deals with data packetized below IP layer and can't use signalling information above RLC layer to hierarchically transmit data. Therefore, RAB identification thanks to the RLC header is the only way to translate content based information from application level to scheduling level via QoS attributes. Simulation results validate the approach in which data are hierarchically handled by the network depending on their relative importance on end to end QoS. Obviously, ROI definition is subject to further investigations with a wider set of test sequences and an extended number of slice groups. Finally, frame partitioning into two regions already provides interesting results. Future works will focus on using the real scalability features of SVC coding in order to better perform resources-QoS optimized packet scheduling.

REFERENCES

[1] IUT Rec. H.264/ISO IEC 14996-10 AVC, "Advanced Video Coding for Generic Audiovisual Services," 2003.

[2] T. Stockhammer and M.M. Hannuksela, "H.264/AVC video for wireless transmission," *IEEE Wireless communications*, vol. 12, pp. 6–13, Aug. 2005.

[3] M. Etoh and T. Yoshimura, "Video Applications in 3G and Beyond," *IEEE Wireless communications*, vol. 12, pp. 66–72, Aug. 2005.

[4] T. Wiegand, G. Sullivan, J. Reichel, H. Schwarz and M. Wien "Joint Draft 9 of SVC Amendment," *Joint Video Team (JVT)*, Doc. JVT-V.201, Marrakech, Marocco, Jan. 2007.

[5] Yan Li, A. Markopoulou, J. Apostolopoulos and N. Bambos, "Joint Packet Scheduling and Content-Aware Playout Control for Video Streaming over Wireless Links," *IEEE 7th Workshop on Multimedia Signal Proc.*, pp. 1–4, Oct. 2005.

[6] C. Bergeron, C. Lamy-Bergot and B. Pesquet-Popescu, "Adaptive M-Band Hierarchical Filterbank for Compliant Temporal Scalability in H.264 Standard," *IEEE Int. Conf. on Acoustics, Speech, and Signal Proc.*, vol. 2, pp. 69–72, March. 2005.

[7] N. Thomos, S. Argyropoulos, N.V. Boulgouris and M.G. Strintzis, "Robust Transmission of H.264/AVC Video using Adaptive Slice Grouping and Unequal Error Protection," *IEEE Int. Conf. on Multimedia and Expo*, pp. 593–596, July. 2006.

[8] M.M. Ghandi, B. Barmada, E.V. Jones and M. Ghanbari, "Unequally Error Protected Data Partitioned Video with Combined Hierarchical Modulation and Channel Coding," *IEEE Int. Conf. on Acoustics, Speech and Signal Proc.*, vol. 2, pp. 529–532, May. 2006.

[9] P.A. Chou and Miao. Zhourong, "Rate-distortion optimized streaming of packetized media," *IEEE Trans. on Multimedia*, vol. 8, pp. 390–404, April. 2006.

[10] J. Chakareski, J.G. Apostolopoulos, S. Wee, W. Tan and B. Girod, "Rate-distortion hint tracks for adaptive video streaming," *IEEE Trans. on Circuits and Systems for Video Technology*, vol. 15, pp. 1257–1269, Oct. 2005.

[11] 3GPP, "Quality of Service (QoS) concept and architecture," *Tech. spec., Group Services and System Aspects*, TS 23.107, March. 2006.

[12] S. Wenger, M.M. Hannuksela, T. Stockhammer, M. Westerlund and D. Singer, "RTP Payload Format for H.264 Video," *Network Working Group, Request for Comments* , RFC 3984, Feb. 2005.

[13] 3GPP, "Transparent end-to-end packet switched streaming service (PSS); RTP usage model," *Tech. spec., Group Services and System Aspects*, TS 26.937, April. 2004.

[14] 3GPP, Siemens, "Software Simulator for MBMS Streaming over UTRAN and GERAN," *Doc. for proposal, TSG System Aspects Working Group4#36*, Tdoc S4-050560, Sept. 2005.

[15] 3GPP, Qualcomm Europe S.A.R.L. and Toshiba Corporation, "Video Network Simulator and Error Masks for 3GPP Services," *Doc. for proposal, TSG System Aspects Working Group4#33*, Tdoc S4-040803, Nov. 2004.

[16] 3GPP, BenQ mobile, "Coponents for TR on Video Minimum performance Requirements," *Doc. for decision, TSG System Aspects Working Group4#39*, Tdoc S4-060265, May. 2006.